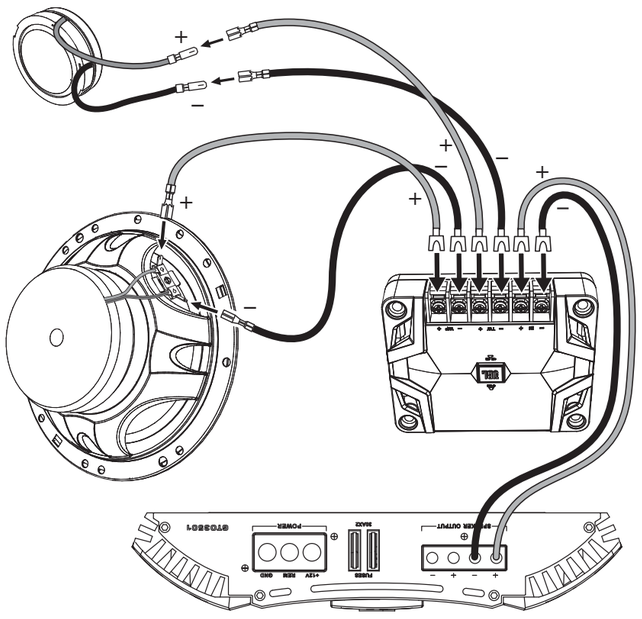

GX600C

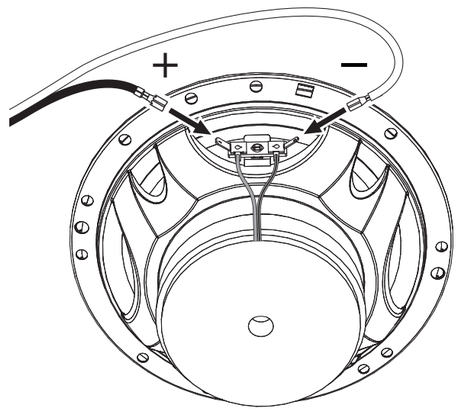

GX302, GX402, GX502, GX602, GX642, GX862, GX962, GX963

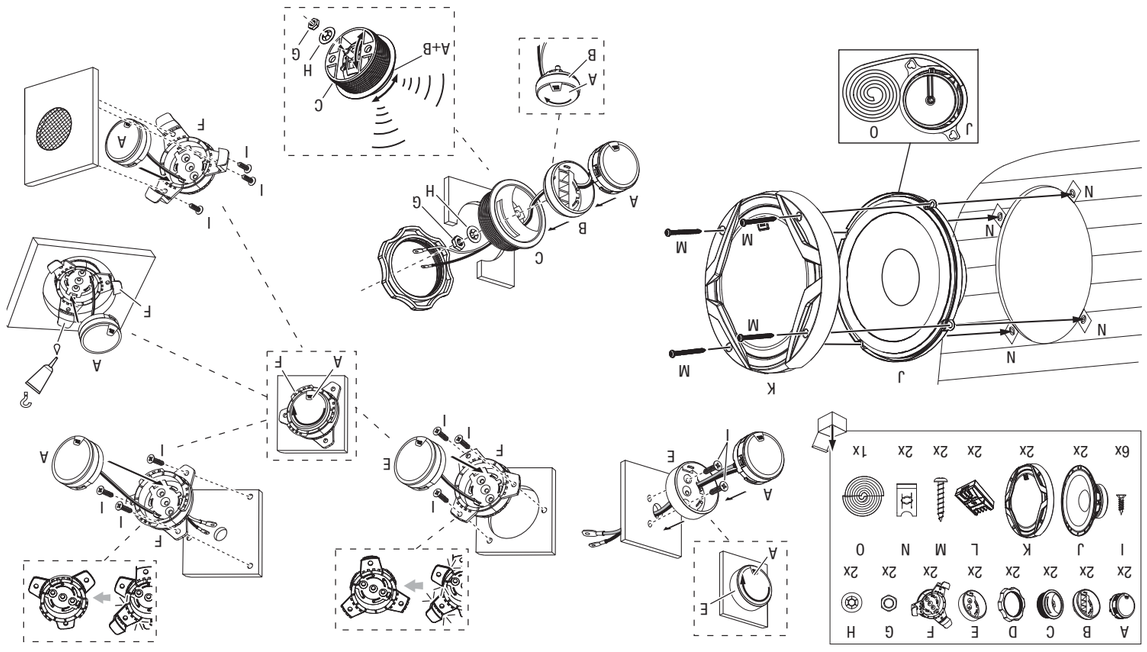

GX600C

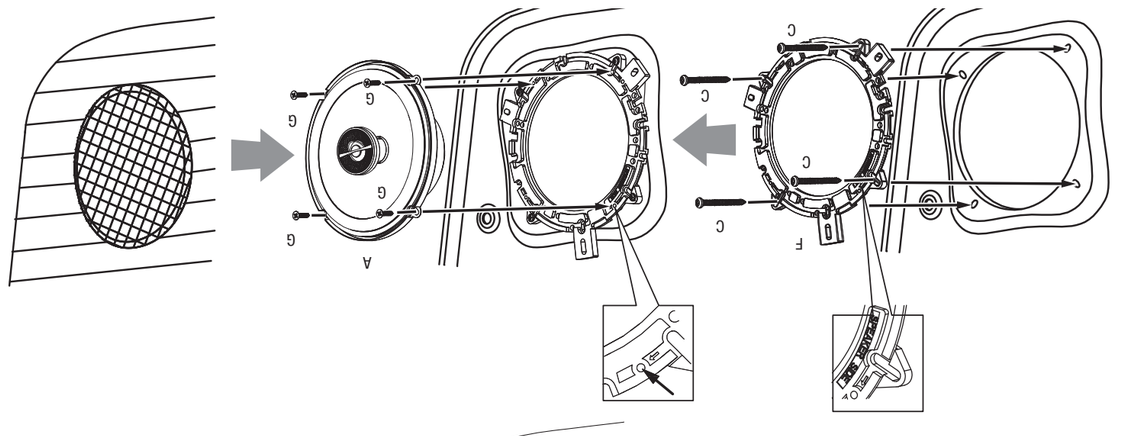

GX602

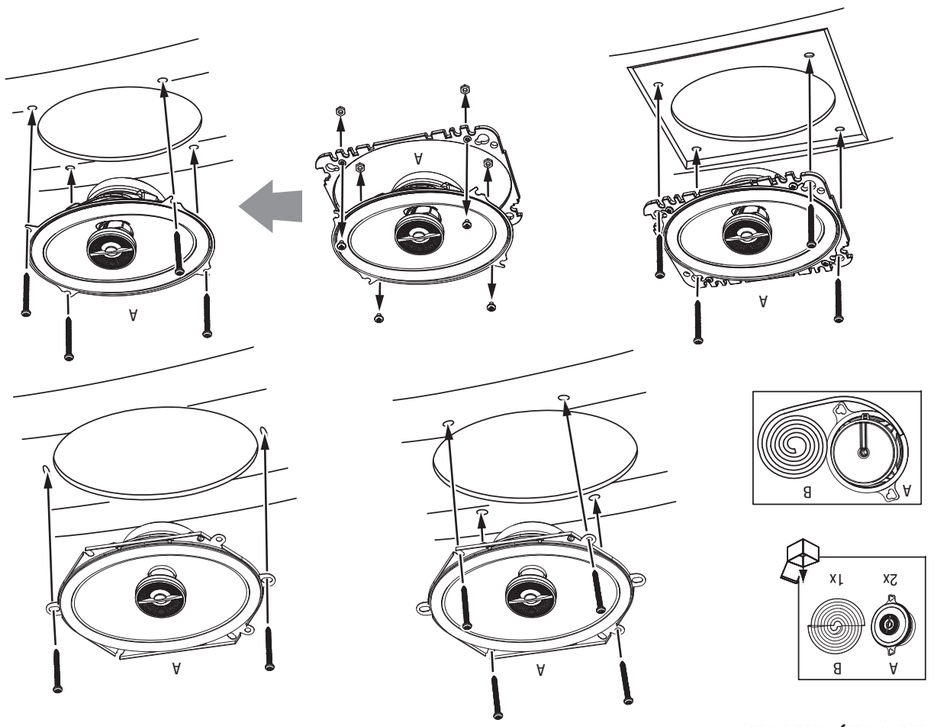

GX 862, GX462

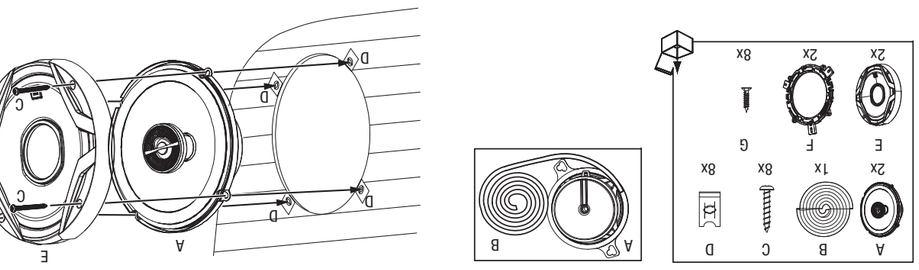

GX302, GX402

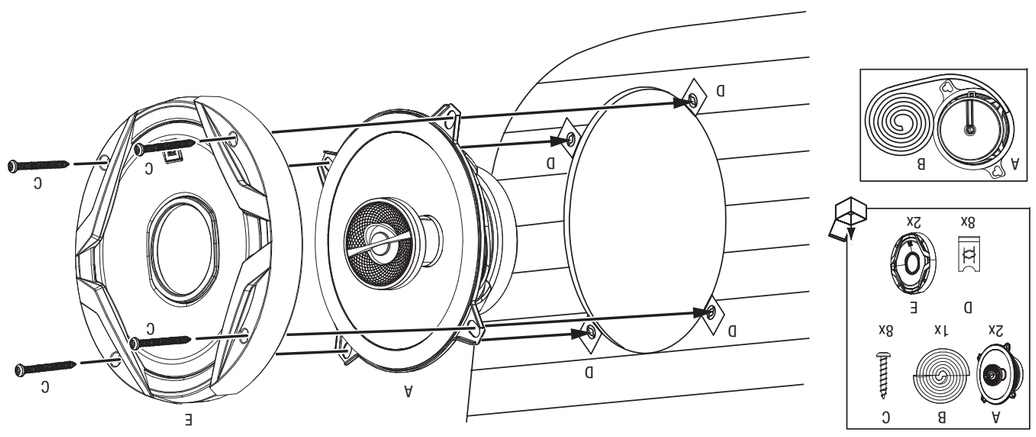

GX502, GX962, GX963

GX502, GX962, GX963

GX302, GX402

HARMAN

HARMAN International Industries, Inc.
8500 Balboa Boulevard, Northridge, CA 91329 USA

© 2014 HARMAN International Industries, Incorporated. All rights reserved.
JBL is a trademark of HARMAN International Industries, Incorporated, registered in the United States and/or other countries.

Features, specifications and appearance are subject to change without notice.

© 2014 HARMAN International Industries, Incorporated. Alle Rechte vorbehalten.
JBL ist eine Marke von Harman International Industries, Incorporated, eingetragen in den USA und/oder anderen Ländern.

Alle Leistungsmerkmale und Spezifikationen sowie das mechanische Design können sich ohne vorherige Ankündigung ändern.

© 2014 HARMAN International Industries, Incorporated. Tous droits réservés.
JBL est une marque de Harman International Industries, Inc., déposée aux États-Unis et/ou dans d'autres pays.

Les fonctionnalités, les spécifications et l'aspect du produit peuvent être modifiés sans préavis.

© 2014 HARMAN International Industries, Incorporated. Reservados todos los derechos.
JBL es una marca de Harman International Industries, Incorporated, registrada en los Estados Unidos y/u otros países.

Las funciones, las especificaciones y el formato están sujetos a cambios sin previo aviso..

© 2014 HARMAN International Industries, Incorporated. Alle rechten voorbehouden.
JBL is een handelsmerk van Harman International Industries, Incorporated, geregistreerd in de Verenigde Staten en/of andere landen.

Eigenschappen, specificaties en vormgeving kunnen zonder voorafgaande kennisgeving worden gewijzigd.

© 2014 HARMAN International Industries, Incorporated. Tutti i diritti sono riservati.
JBL è un marchio proprietario di Harman International Industries, Incorporated, registrato negli Stati Uniti e/o altre nazioni.

Funzionalità, specifiche e aspetto sono soggetti a modifica senza preavviso.

© 2014 HARMAN International Industries, Incorporated. Alla rättigheter reserverade.
JBL är ett varumärke som tillhör Harman International Industries, Incorporated, som är registrerad i USA och/eller andra länder.

Funktioner, specifikationer och design kan komma att ändras utan föregående meddelande.

© 2014 HARMAN International Industries, Incorporated. Alle rettigheder forbeholdes.
JBL varemærket tilhører Harman International Industries, Inc., registreret i USA og/eller andre lande.

Der forbeholdes ret til ændring af beskrivelse, specifikationer og udseende uden varsel.

© 2014 HARMAN International Industries, Incorporated. Kaikki oikeudet pidätetään.
JBL on Harman International Industries, Incorporatedin tavaramerkki, joka on rekisteröity Yhdysvalloissa ja/tai muissa maissa.

Ominaisuuksia, teknisiä tietoja ja ulkoasua voidaan muuttaa ilman erillistä ilmoitusta..

© 2014 HARMAN International Industries, Incorporated. 無断複写・転載を禁じます。
JBLは米国およびその他の国々におけるHarman International Industries, Incorporatedの登録商標です。

製品の仕様および外観は、改良のため予告無く変更する場合があります。

© 2014 HARMAN International Industries, Incorporated. 保留一切权利.
JBL 为在美国及/或其它国家注册的哈曼国际工业公司
（Harman International Industries, Incorporated）的商标。

以上规格如有变更，恕不另行通知。

© 2014 HARMAN International Industries, Incorporated. Все права защищены.
JBL является торговой маркой Harman International Industries, Incorporated, зарегистрированной в США и/или других странах.

Функции, характеристики и внешний вид описываемых компонентов могут быть изменены без предварительного уведомления.

© 2014 HARMAN International Industries, Incorporated. Wszelkie prawa zastrzeżone.
JBL to znak towarowy Harman International Industries, Incorporated zarejestrowane w Stanach Zjednoczonych i/lub innych krajach.

Cechy, dane techniczne i wygląd produktów mogą być przedmiotem zmian bez uprzedniego poinformowania.

© 2014 HARMAN International Industries, Incorporated. Todos os direitos reservados.
JBL é uma marca comercial da Harman International Industries, Incorporated, registada nos Estados Unidos e/ou noutros países.

As funções, as especificações e o aspecto estão sujeitos a alteração sem aviso prévio.

© 2014 HARMAN International Industries, Incorporated. 保留所有權利。
JBL 是 Harman International Industries, Incorporated 在美國及/或其他 國家或地區的註冊商標。

功能、規格和外觀如有更改，恕不另行通知。

© 2014 HARMAN International Industries, Incorporated. Tüm hakları saklıdır.
JBL, Harman International Industries, Incorporated firmasının ABD ve/veya diğer ülkelerde tescildilen ticari markasıdır.

Özellikleri, teknik özellikleri ve görüntüsü önceden haber verilmeden değiştirilebilir.

www.jbl.com

JBL® GX-SERIES

car audio speaker
car-audio lautsprecher
haut-parleur pour voiture
altavoz de audio para automóvil
audioluidspreker voor in de auto
diffusore audio per automobile
bilhögtalare
bilhøjtaler
autokaiutin
カーオーディオ・スピーカー
车载扬声器
автомобильный громкоговоритель
głośnik samochodowy
coluna de som para automóvel
車用音響喇叭
araç hoparlörü

INSTALLATION MANUAL
EINBAUANLEITUNG
GUIDE D'INSTALLATION
MANUAL DE INSTALACIÓN
MONTAGEHANDLEIDING
INSTALLAZIONE MANUALE
INSTALLATIONSMANUAL
INSTALLATIONSVEJLEDNING
ASENNUSOHJE
取付説明書
安装手册
РУКОВОДСТВО ПО УСТАНОВКЕ
PODRĘCZNIK INSTALACJI
MANUAL DE INSTALAÇÃO
安裝手冊
KURULUM KILAVUZU

GX302

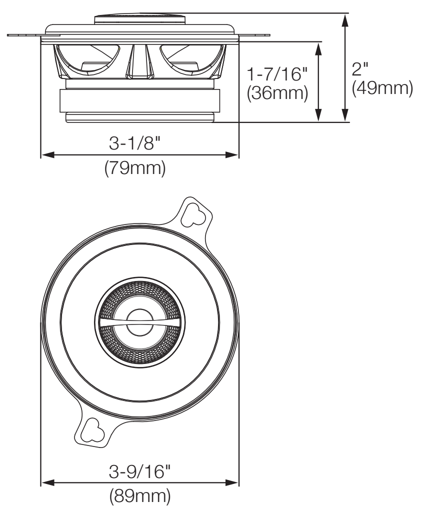

GX402

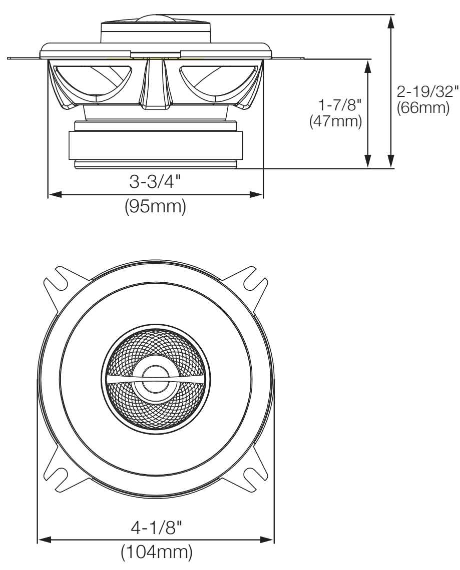

GX502

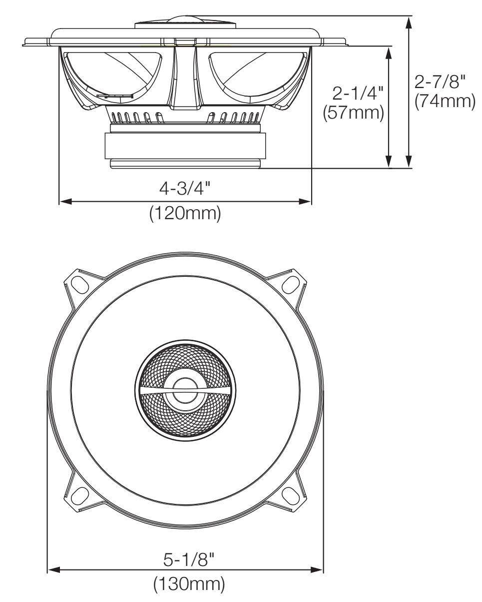

GX602

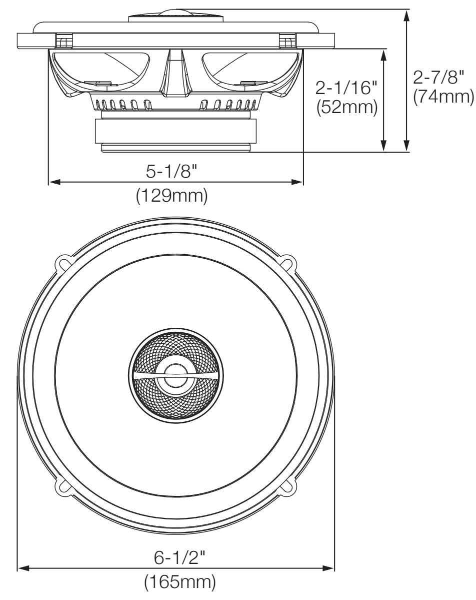

GX600C

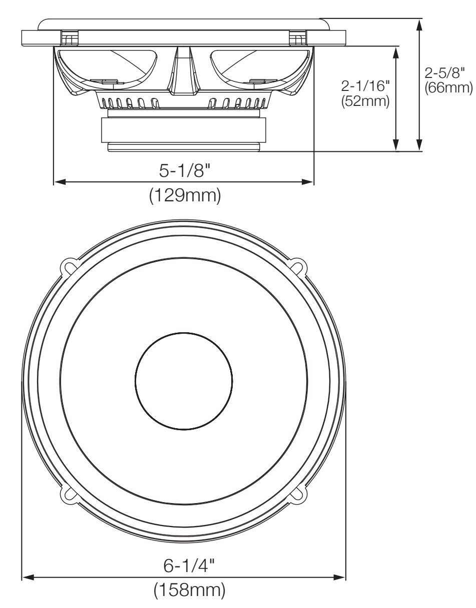

GX642

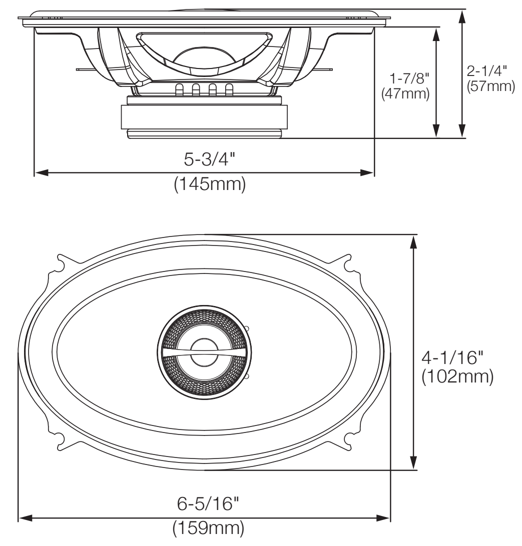

GX862

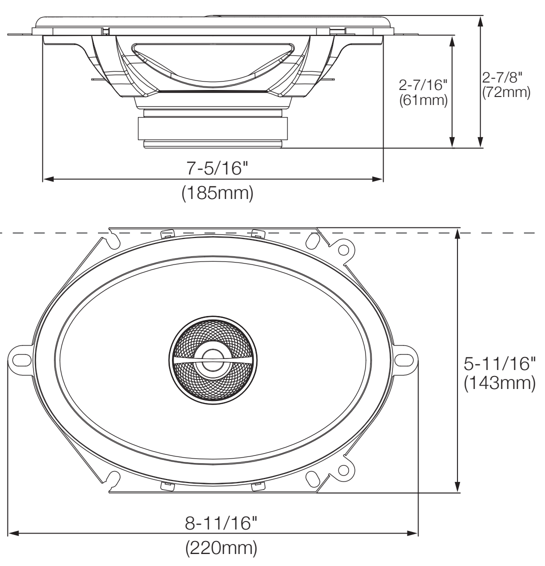

GX962/GX963

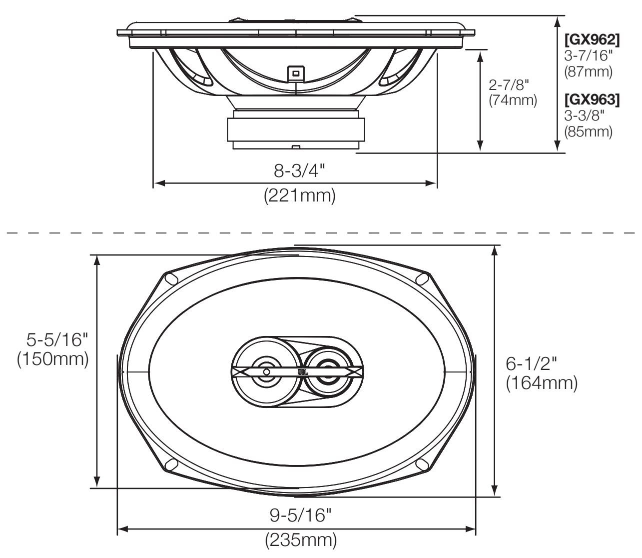

Торговая марка:	JBL
Назначение товара:	АВТОМОБИЛЬНАЯ АКУСТИЧЕСКАЯ СИСТЕМА
Изготовитель:	ХАРМАН ИНТЕРНЕШНЛ ИНДАСТРИЗ ИНКОРПОРЕЙТЕД, США, 06901 КОННЕКТИКУТ, г.СТЭМФОРД, АТЛАНТИК СТРИТ 400, ОФИС 1500
Страна происхождения:	Китай
Импортер в Россию:	ООО "ХАРМАН РУС СиАйЭс", РОССИЯ, 123317, МОСКВА, ПРЕСНЕНСКАЯ НАБ, Д.10
Гарантийный период:	1 год
Информация о сервисных центрах:	http://ru.jbl.com тел. +7-800-700-0467
Срок службы:	7 лет
Срок хранения:	не ограничен
Условия хранения:	Стандартные при нормальных значениях климатических факторов внешней среды
Номер документа соответствия:	Товар не подлежит обязательной сертификации. Информационное письмо от органа по сертификации «Ростест-Москва» (ЗАО «РОСТЕСТ») № 05-21/478 от 31.10.2013

SPECIFICATIONS

English

	GX302	GX402	GX502	GX602	GX642	GX862	GX962	GX963	GX600C
Type	3-1/2" (89mm) two-way speaker	4" (100mm) two-way speaker	5-1/4" (130mm) two-way speaker	6-1/2" (165 mm) two-way speaker	4" x 6" (100mm x 152mm) two-way speaker	5" x 7" / 6" x 8" (143mm x 220mm) two-way speaker	6" x 9" (152mm x 230mm) two-way speaker	6" x 9" (152mm x 230mm) three-way speaker	6-1/2" (165mm) two-way component system
Continuous power handling	25W	35W	45W	60W	40W	60W	100W	100W	70W
Peak power handling	75W	105W	135W	180W	120W	180W	300W	300W	210W
Frequency response	90Hz – 20kHz	75Hz – 21kHz	65Hz – 21kHz	50Hz – 21kHz	75Hz – 21kHz	50Hz – 21kHz	45Hz – 21kHz	45Hz – 21kHz	50Hz – 21kHz
Nominal impedance	2.3 ohms	2.3 ohms	2.3 ohms	2.3 ohms	2.3 ohms	2.3 ohms	2.3 ohms	2.3 ohms	2.3 ohms
Sensitivity (2.83V/m)	89dB	90dB	91dB	92dB	91dB	92dB	94dB	94dB	92dB
External diameter	3-9/16" (89mm)	4-1/8" (104mm)	5-1/8" (130mm)	6-1/2" (165mm)	4-1/16" x 6-5/16" (102mm x 159mm)	5-11/16" x 8-11/16" (143mm x 220mm)	6-1/2" x 9-5/16" (164mm x 235mm)	6-1/2" x 9-5/16" (164mm x 235mm)	6-1/4" (158mm)
Mounting cutout diameter	3-1/8" (79mm)	3-3/4" (95mm)	4-3/4" (120mm)	5-1/8" (129mm)	3-7/16" x 5-3/4" (86mm x 145mm)	5" x 7-5/16" (126mm x 185mm)	5-15/16" x 8-3/4" (150mm x 221mm)	5-15/16" x 8-3/4" (150mm x 221mm)	5-1/8" (129mm)
Total depth	2" (49mm)	2-19/32" (66mm)	2-7/8" (74mm)	2-7/8" (72mm)	2-1/4" (57mm)	2-7/8" (72mm)	3-7/16" (87mm)	3-3/8" (85mm)	2-5/8" (66mm)
Mounting depth	1-7/16" (36mm)	1-7/8" (47mm)	2-1/4" (57mm)	2-1/16" (52mm)	1-7/8" (47mm)	2-7/16" (61mm)	2-7/8" (74mm)	2-7/8" (74mm)	2-1/16" (52mm)

TECHNISCHE DATEN

Deutsch

	GX302	GX402	GX502	GX602	GX642	GX862	GX962	GX963	GX600C
Typ	3-1/2" 2-Wegs Lautsprecher	4" 2-Wegs Lautsprecher	5-1/4" 2-Wege Lautsprecher	6-1/2" 3-Wege Lautsprecher	4" x 6" 2-Wege Lautsprecher	5" x 7" / 6" x 8" 2-Wege Lautsprecher	6" x 9" 2-Wege Lautsprecher	6" x 9" 3-Wege Lautsprecher	6-1/2" 2-Wege Komponentensystem
Dauerbelastbarkeit	25W	35W	45W	60W	40W	60W	100W	100W	70W
Spitzenbelastbarkeit	75W	105W	135W	180W	120W	180W	300W	300W	210W
Frequenzbereich	90Hz – 20kHz	75Hz – 21kHz	65Hz – 21kHz	50Hz – 21kHz	75Hz – 21kHz	50Hz – 21kHz	45Hz – 21kHz	45Hz – 21kHz	50 Hz – 21 kHz
Nennimpedanz	2.3 ohm	2.3 ohm	2.3 ohm	2.3 ohm	2.3 ohms	2.3 ohms	2.3 ohms	2.3 ohms	2.3 ohm
Wirkungsgrad @ 2,83V/1 Meter	89dB	90dB	91dB	92dB	91dB	92dB	94dB	94dB	92dB
Außendurchmesser	89mm	104mm	130mm	165mm	102mm x 159mm	143mm x 220mm	164mm x 235mm	164mm x 235mm	158mm
Durchmesser des Montageausschnittes	79mm	95mm	120mm	129mm	86mm x 145mm	126mm x 185mm	150mm x 221mm	150mm x 221mm	129mm
Vollständige Tiefe	49mm	66mm	74mm	72mm	57mm	72mm	87mm	85mm	66mm
Einbautiefe	36mm	47mm	57mm	52mm	47mm	61mm	74mm	74mm	52mm

CARACTÉRISTIQUES

Français

	GX302	GX402	GX502	GX602	GX642	GX862	GX962	GX963	GX600C
Type	3-1/2" haut-parleur deux	4" haut-parleur deux voies	5-1/4" haut-parleur deux voies	6-1/2" haut-parleur deux voies	4" x 6" haut-parleur deux voies	5" x 7" / 6" x 8" haut-parleur deux voies	6" x 9" haut-parleur deux voies	6" x 9" haut-parleur trois voies	6-1/2" système composant deux voies
Puissance continue admissible	25W	35W	45W	60W	40W	60W	100W	100W	70W
Puissance crête admissible	75W	105W	135W	180W	120W	180W	300W	300W	210W
Réponse en fréquence	90Hz – 20kHz	75Hz – 21kHz	65Hz – 21kHz	50Hz – 21kHz	75Hz – 21kHz	50Hz – 21kHz	45Hz – 21kHz	45Hz – 21kHz	50Hz – 21kHz
Impédance nominale	2.3 ohms	2.3 ohms	2.3 ohms	2.3 ohms	2.3 ohms	2.3 ohms	2.3 ohms	2.3 ohms	2.3 ohms
Sensibilité @ 2,83V/1m	89dB	90dB	91dB	92dB	91dB	92dB	94dB	94dB	92dB
Diamètre extérieur	3-9/16" (89mm)	4-1/8" (104mm)	5-1/8" (130mm)	6-1/2" (165mm)	4-1/16" x 6-5/16" (102mm x 159mm)	5-11/16" x 8-11/16" (143mm x 220mm)	6-1/2" x 9-5/16" (164mm x 235mm)	6-1/2" x 9-5/16" (164mm x 235mm)	6-1/4" (158mm)
Diamètre de découpe	3-1/8" (79mm)	3-3/4" (95mm)	4-3/4" (120mm)	5-1/8" (129mm)	3-7/16" x 5-3/4" (86mm x 145mm)	5" x 7-5/16" (126mm x 185mm)	5-15/16" x 8-3/4" (150mm x 221mm)	5-15/16" x 8-3/4" (150mm x 221mm)	5-1/8" (129mm)
Profondeur totale	2" (49mm)	2-19/32" (66mm)	2-7/8" (74mm)	2-7/8" (72mm)	2-1/4" (57mm)	2-7/8" (72mm)	3-7/16" (87mm)	3-3/8" (85mm)	2-5/8" (66mm)
Profondeur de montage	1-7/16" (36mm)	1-7/8" (47mm)	2-1/4" (57mm)	2-1/16" (52mm)	1-7/8" (47mm)	2-7/16" (61mm)	2-7/8" (74mm)	2-7/8" (74mm)	2-1/16" (52mm)

ESPICIFICACIONES

Español

	GX302	GX402	GX502	GX602	GX642	GX862	GX962	GX963	GX600C
Tipo	3-1/2" altavoces de dos vías	4" altavoces de dos vías	5-1/4" altavoces de dos vías	6-1/2" altavoces de dos vías	4" x 6" altavoces de dos vías	5" x 7" / 6" x 8" altavoces de dos vías	6" x 9" altavoces de dos vías	6" x 9" altavoces de tres vías	6-1/2" componente de sistema de dos vías
Manejo de potencia continua	25W	35W	45W	60W	40W	60W	100W	100W	70W
Manejo de potencia punta	75W	105W	135W	180W	120W	180W	300W	300W	210W
Respuesta en frecuencia	90Hz – 20kHz	75Hz – 21kHz	65Hz – 21kHz	50Hz – 21kHz	75Hz – 21kHz	50Hz – 21kHz	45Hz – 21kHz	45Hz – 21kHz	50Hz – 21kHz
Impedancia nomina	2.3 ohms	2.3 ohms	2.3 ohms	2.3 ohms	2.3 ohms	2.3 ohms	2.3 ohms	2.3 ohms	2.3 ohms
Sensibilidad 2.83V @ 1 metro	89dB	90dB	91dB	92dB	91dB	92dB	94dB	94dB	92dB
Diámetro exterior	3-9/16" (89mm)	4-1/8" (104mm)	5-1/8" (130mm)	6-1/2" (165mm)	4-1/16" x 6-5/16" (102mm x 159mm)	5-11/16" x 8-11/16" (143mm x 220mm)	6-1/2" x 9-5/16" (164mm x 235mm)	6-1/2" x 9-5/16" (164mm x 235mm)	6-1/4" (158mm)
Montaje de diámetro recorte	3-1/8" (79mm)	3-3/4" (95mm)	4-3/4" (120mm)	5-1/8" (129mm)	3-7/16" x 5-3/4" (86mm x 145mm)	5" x 7-5/16" (126mm x 185mm)	5-15/16" x 8-3/4" (150mm x 221mm)	5-15/16" x 8-3/4" (150mm x 221mm)	5-1/8" (129mm)
Profundidad total	2" (49mm)	2-19/32" (66mm)	2-7/8" (74mm)	2-7/8" (72mm)	2-1/4" (57mm)	2-7/8" (72mm)	3-7/16" (87mm)	3-3/8" (85mm)	2-5/8" (66mm)
Profundidad de montaje	1-7/16" (36mm)	1-7/8" (47mm)	2-1/4" (57mm)	2-1/16" (52mm)	1-7/8" (47mm)	2-7/16" (61mm)	2-7/8" (74mm)	2-7/8" (74mm)	2-1/16" (52mm)

SPECIFICATIES

Nederlands

	GX302	GX402	GX502	GX602	GX642	GX862	GX962	GX963	GX600C
Type	3-1/2" twee-wegluidspreker	4" twee-wegluidspreker	5-1/4" twee-wegluidspreker	6-1/2" twee-wegluidspreker	4" x 6" twee-wegluidspreker	5" x 7" / 6" x 8" twee-wegluidspreker	6" x 9" twee-wegluidspreker	6" x 9" drie-wegluidspreker	6-1/2" twee-weg component systeem
Continuvermogen afhandeling	25W	35W	45W	60W	40W	60W	100W	100W	70W
Piekvermogen afhandeling	75W	105W	135W	180W	120W	180W	300W	300W	210W
Frequentiebereik	90Hz – 20kHz	75Hz – 21kHz	65Hz – 21kHz	50Hz – 21kHz	75Hz – 21kHz	50Hz – 21kHz	45Hz – 21kHz	45Hz – 21kHz	50Hz – 21kHz
Nominale impedantie	2.3 ohm	2.3 ohm	2.3 ohm	2.3 ohm	2.3 ohm	2.3 ohm	2.3 ohm	2.3 ohm	2.3 ohm
Gevoeligheid 2,83V @ 1 meter	89dB	90dB	91dB	92dB	91dB	92dB	94dB	94dB	92dB
Uitwendige diameter	3-9/16" (89mm)	4-1/8" (104mm)	5-1/8" (130mm)	6-1/2" (165mm)	4-1/16" x 6-5/16" (102mm x 159mm)	5-11/16" x 8-11/16" (143mm x 220mm)	6-1/2" x 9-5/16" (164mm x 235mm)	6-1/2" x 9-5/16" (164mm x 235mm)	6-1/4" (158mm)
Montage uitsparingsdiameter	3-1/8" (79mm)	3-3/4" (95mm)	4-3/4" (120mm)	5-1/8" (129mm)	3-7/16" x 5-3/4" (86mm x 145mm)	5" x 7-5/16" (126mm x 185mm)	5-15/16" x 8-3/4" (150mm x 221mm)	5-15/16" x 8-3/4" (150mm x 221mm)	5-1/8" (129mm)
Totale diepte	2" (49mm)	2-19/32" (66mm)	2-7/8" (74mm)	2-7/8" (72mm)	2-1/4" (57mm)	2-7/8" (72mm)	3-7/16" (87mm)	3-3/8" (85mm)	2-5/8" (66mm)
Inbouwdiepte	1-7/16" (36mm)	1-7/8" (47mm)	2-1/4" (57mm)	2-1/16" (52mm)	1-7/8" (47mm)	2-7/16" (61mm)	2-7/8" (74mm)	2-7/8" (74mm)	2-1/16" (52mm)

SPECIFIKATIONER

Svenska

	GX302	GX402	GX502	GX602	GX642	GX862	GX962	GX963	GX600C
Typ	3-1/2" två-vägshögtalare	4" två-vägshögtalare	5-1/4" två-vägshögtalare	6-1/2" tre-vägshögtalare	4" x 6" två-vägshögtalare	5" x 7" / 6" x 8" två-vägshögtalare	6" x 9" två-vägshögtalare	6" x 9" tre-vägshögtalare	6-1/2" två-vägs komponentsystem
Kontinuerlig märkeffekt	25W	35W	45W	60W	40W	60W	100W	100W	70W
Toppeffekt hantering	75W	105W	135W	180W	120W	180W	300W	300W	210W
Frekvensområde	90Hz – 20kHz	75Hz – 21kHz	65Hz – 21kHz	50Hz – 21kHz	75Hz – 21kHz	50Hz – 21kHz	45Hz – 21kHz	45Hz – 21kHz	50Hz – 21kHz
Nominel impedans	2.3 ohms	2.3 ohms	2.3 ohms	2.3 ohms	2.3 ohms	2.3 ohms	2.3 ohms	2.3 ohms	2.3 ohms
Känslighet 2,83V @ 1 meter	89dB	90dB	91dB	92dB	91dB	92dB	94dB	94dB	92dB
Yttre diameter	3-9/16" (89mm)	4-1/8" (104mm)	5-1/8" (130mm)	6-1/2" (165mm)	4-1/16" x 6-5/16" (102mm x 159mm)	5-11/16" x 8-11/16" (143mm x 220mm)	6-1/2" x 9-5/16" (164mm x 235mm)	6-1/2" x 9-5/16" (164mm x 235mm)	6-1/4" (158mm)
Montering utskuren diameter	3-1/8" (79mm)	3-3/4" (95mm)	4-3/4" (120mm)	5-1/8" (129mm)	3-7/16" x 5-3/4" (86mm x 145mm)	5" x 7-5/16" (126mm x 185mm)	5-15/16" x 8-3/4" (150mm x 221mm)	5-15/16" x 8-3/4" (150mm x 221mm)	5-1/8" (129mm)
Totalt djup	2" (49mm)	2-19/32" (66mm)	2-7/8" (74mm)	2-7/8" (72mm)	2-1/4" (57mm)	2-7/8" (72mm)	3-7/16" (87mm)	3-3/8" (85mm)	2-5/8" (66mm)
Monteringsdjup	1-7/16" (36mm)	1-7/8" (47mm)	2-1/4" (57mm)	2-1/16" (52mm)	1-7/8" (47mm)	2-7/16" (61mm)	2-7/8" (74mm)	2-7/8" (74mm)	2-1/16" (52mm)

SPECIFICHE

Italiano

	GX302	GX402	GX502	GX602	GX642	GX862	GX962	GX963	GX600C
Tipo	3-1/2" diffusore a due vie	4" diffusore a due vie	5-1/4" diffusore a due vie	6-1/2" diffusore a due vie	4" x 6" diffusore a due vie	5" x 7" / 6" x 8" diffusore a due vie	6" x 9" diffusore a due vie	6" x 9" diffusore a tre vie	6-1/2" sistema componente a due vie
Gestione continua corrente	25W	35W	45W	60W	40W	60W	100W	100W	70W
Gestione corrente picco	75W	105W	135W	180W	120W	180W	300W	300W	210W
Risposta in frequenza	90Hz – 20kHz	75Hz – 21kHz	65Hz – 21kHz	50Hz – 21kHz	75Hz – 21kHz	50Hz – 21kHz	45Hz – 21kHz	45Hz – 21kHz	50Hz – 21kHz
Impedenza nominale	2.3 ohms	2.3 ohms	2.3 ohms	2.3 ohms	2.3 ohms	2.3 ohms	2.3 ohms	2.3 ohms	2.3 ohms
Sensibilità 2.83V @ 1 metro	89dB	90dB	91dB	92dB	91dB	92dB	94dB	94dB	92dB
Diametro esterno	3-9/16" (89mm)	4-1/8" (104mm)	5-1/8" (130mm)	6-1/2" (165mm)	4-1/16" x 6-5/16" (102mm x 159mm)	5-11/16" x 8-11/16" (143mm x 220mm)	6-1/2" x 9-5/16" (164mm x 235mm)	6-1/2" x 9-5/16" (164mm x 235mm)	6-1/4" (158mm)
Diametro soglia di montaggio	3-1/8" (79mm)	3-3/4" (95mm)	4-3/4" (120mm)	5-1/8" (129mm)	3-7/16" x 5-3/4" (86mm x 145mm)	5" x 7-5/16" (126mm x 185mm)	5-15/16" x 8-3/4" (150mm x 221mm)	5-15/16" x 8-3/4" (150mm x 221mm)	5-1/8" (129mm)
Profondità totale	2" (49mm)	2-19/32" (66mm)	2-7/8" (74mm)	2-7/8" (72mm)	2-1/4" (57mm)	2-7/8" (72mm)	3-7/16" (87mm)	3-3/8" (85mm)	2-5/8" (66mm)
Profondità di montaggio	1-7/16" (36mm)	1-7/8" (47mm)	2-1/4" (57mm)	2-1/16" (52mm)	1-7/8" (47mm)	2-7/16" (61mm)	2-7/8" (74mm)	2-7/8" (74mm)	2-1/16" (52mm)

SPECIFIKATIONER

Dansk

	GX302	GX402	GX502	GX602	GX642	GX862	GX962	GX963	GX600C
Type	3-1/2" tovejs-højttaler	4" tovejs-højttaler	5-1/4" tovejs-højttaler	6-1/2" tovejs-højttaler	4" x 6" tovejs-højttaler	5" x 7" / 6" x 8" tovejs-højttaler	6" x 9" tovejs-højttaler	6" x 9" trevejs-højttaler	6-1/2" tovejs-komponentsystem
Kontinuerlig strømstyring	25W	35W	45W	60W	40W	60W	100W	100W	70W
Spidsbelastning-strømstyring	75W	105W	135W	180W	120W	180W	300W	300W	210W
Frekvensgang	90Hz – 20kHz	75Hz – 21kHz	65Hz – 21kHz	50Hz – 21kHz	75Hz – 21kHz	50Hz – 21kHz	45Hz – 21kHz	45Hz – 21kHz	50Hz – 21kHz
Nominel impedans	2.3 ohms	2.3 ohms	2.3 ohms	2.3 ohms	2.3 ohms	2.3 ohms	2.3 ohms	2.3 ohms	2.3 ohms
Følsomhed 2,83V, 1m	89dB	90dB	91dB	92dB	91dB	92dB	94dB	94dB	92dB
Ekstern diameter	3-9/16" (89mm)	4-1/8" (104mm)	5-1/8" (130mm)	6-1/2" (165mm)	4-1/16" x 6-5/16" (102mm x 159mm)	5-11/16" x 8-11/16" (143mm x 220mm)	6-1/2" x 9-5/16" (164mm x 235mm)	6-1/2" x 9-5/16" (164mm x 235mm)	6-1/4" (158mm)
udskåret diameter	3-1/8" (79mm)	3-3/4" (95mm)	4-3/4" (120mm)	5-1/8" (129mm)	3-7/16" x 5-3/4" (86mm x 145mm)	5" x 7-5/16" (126mm x 185mm)	5-15/16" x 8-3/4" (150mm x 221mm)	5-15/16" x 8-3/4" (150mm x 221mm)	5-1/8" (129mm)
Total dybde	2" (49mm)	2-19/32" (66mm)	2-7/8" (74mm)	2-7/8" (72mm)	2-1/4" (57mm)	2-7/8" (72mm)	3-7/16" (87mm)	3-3/8" (85mm)	2-5/8" (66mm)
Monteringsdybde	1-7/16" (36mm)	1-7/8" (47mm)	2-1/4" (57mm)	2-1/16" (52mm)	1-7/8" (47mm)	2-7/16" (61mm)	2-7/8" (74mm)	2-7/8" (74mm)	2-1/16" (52mm)

TEKNISET TIEDOT

Suomi

	GX302	GX402	GX502	GX602	GX642	GX862	GX962	GX963	GX963
Tyyppi	3-1/2" kaksitiekaiutin	4" kaksitiekaiutin	5-1/4" kaksitiekaiutin	6-1/2" kaksitiekaiutin	4" X 6" kaksitiekaiutin	5" X 7" / 6" X 8" kaksitiekaiutin	6" x 9" kaksitiekaiutin	6" x 9" kolmitiekaiutin	6-1/2" kaksitie-erillissarja
Continuous power handling	25W	35W	45W	60W	40W	60W	100W	100W	70W
Peak power handling	75W	105W	135W	180W	120W	180W	300W	300W	210W
Taajuusvaste	90Hz – 20kHz	75Hz – 21kHz	65Hz – 21kHz	50Hz – 21kHz	75Hz – 21kHz	50Hz – 21kHz	45Hz – 21kHz	45Hz – 21kHz	50Hz – 21kHz
Nimellisimpedanssi	2.3 ohmia	2.3 ohmia	2.3 ohmia	2.3 ohmia	2.3 ohmia	2.3 ohmia	2.3 ohmia	2.3 ohmia	2.3 ohmia
Herkkyys 2,83V @ 1 m	89dB	90dB	91dB	92dB	91dB	92dB	94dB	94dB	92dB
ulkohalkaisija	3-9/16" (89mm)	4-1/8" (104mm)	5-1/8" (130mm)	6-1/2" (165mm)	4-1/16" x 6-5/16" (102mm x 159mm)	5-11/16" x 8-11/16" (143mm x 220mm)	6-1/2" x 9-5/16" (164mm x 235mm)	6-1/2" x 9-5/16" (164mm x 235mm)	6-1/4" (158mm)
asennusaukon halkaisija	3-1/8" (79mm)	3-3/4" (95mm)	4-3/4" (120mm)	5-1/8" (129mm)	3-7/16" x 5-3/4" (86mm x 145mm)	5" x 7-5/16" (126mm x 185mm)	5-15/16" x 8-3/4" (150mm x 221mm)	5-15/16" x 8-3/4" (150mm x 221mm)	5-1/8" (129mm)
kokonaissyvyys	2" (49mm)	2-19/32" (66mm)	2-7/8" (74mm)	2-7/8" (72mm)	2-1/4" (57mm)	2-7/8" (72mm)	3-7/16" (87mm)	3-3/8" (85mm)	2-5/8" (66mm)
asennussyvyys	1-7/16" (36mm)	1-7/8" (47mm)	2-1/4" (57mm)	2-1/16" (52mm)	1-7/8" (47mm)	2-7/16" (61mm)	2-7/8" (74mm)	2-7/8" (74mm)	2-1/16" (52mm)

仕様

Japanese

	GX302	GX402	GX502	GX602	GX642	GX862	GX962	GX963	GX600C
形式	3-1/2" 2ウェイ・スピーカー	4" 2ウェイ・スピーカー	5-1/4" 2ウェイ・スピーカー	6-1/2" 2ウェイ・スピーカー	4" x 6" 2ウェイ・スピーカー	5" x 7" / 6" x 8" 2ウェイ・スピーカー	6" x 9" 2ウェイ・スピーカー	6" x 9" 3ウェイ・スピーカー	6-1/2" 2ウェイ・コンポーネント・システム
定格入力	25W	35W	45W	60W	40W	60W	100W	100W	70W
最大許容入力	75W	105W	135W	180W	120W	180W	300W	300W	210W
周波数特性	90Hz – 20kHz	75Hz – 21kHz	65Hz – 21kHz	50Hz – 21kHz	75Hz – 21kHz	50Hz – 21kHz	45Hz – 21kHz	45Hz – 21kHz	50Hz – 21kHz
インピーダンス	2.3オーム	2.3オーム	2.3オーム	2.3オーム	2.3オーム	2.3オーム	2.3オーム	2.3オーム	2.3オーム
出力音差レベル (2.83V/m)	89dB	90dB	91dB	92dB	91dB	92dB	94dB	94dB	92dB
外形寸法	3-9/16" (89mm)	4-1/8" (104mm)	5-1/8" (130mm)	6-1/2" (165mm)	4-1/16" x 6-5/16" (102mm x 159mm)	5-11/16" x 8-11/16" (143mm x 220mm)	6-1/2" x 9-5/16" (164mm x 235mm)	6-1/2" x 9-5/16" (164mm x 235mm)	6-1/4" (158mm)
取付穴径	3-1/8" (79mm)	3-3/4" (95mm)	4-3/4" (120mm)	5-1/8" (129mm)	3-7/16" x 5-3/4" (86mm x 145mm)	5" x 7-5/16" (126mm x 185mm)	5-15/16" x 8-3/4" (150mm x 221mm)	5-15/16" x 8-3/4" (150mm x 221mm)	5-1/8" (129mm)
最大奥行	2" (49mm)	2-19/32" (66mm)	2-7/8" (74mm)	2-7/8" (72mm)	2-1/4" (57mm)	2-7/8" (72mm)	3-7/16" (87mm)	3-3/8" (85mm)	2-5/8" (66mm)
埋め込み寸法	1-7/16" (36mm)	1-7/8" (47mm)	2-1/4" (57mm)	2-1/16" (52mm)	1-7/8" (47mm)	2-7/16" (61mm)	2-7/8" (74mm)	2-7/8" (74mm)	2-1/16" (52mm)

规格

简体中文

	GX302	GX402	GX502	GX602	GX642	GX862	GX962	GX963	GX600C
类型	3-1/2" 二分频扬声器	4" 二分频扬声器	5-1/4" 二分频扬声器	6-1/2" 二分频扬声器	4" x 6" 二分频扬声器	5" x 7" / 6" x 8" 二分频扬声器	6" x 9" 三分频扬声器	6" x 9" 三分频扬声器	6-1/2" 二分频分体式扬声器系统
持续功率	25瓦	35瓦	45瓦	60瓦	40瓦	60瓦	100瓦	100瓦	70瓦
峰值功率	75瓦	105瓦	135瓦	180瓦	120瓦	180瓦	300瓦	300瓦	210瓦
频响	90赫兹至 – 20千赫兹	75赫兹至 – 21千赫兹	65赫兹至 – 21千赫兹	50赫兹至– 21千赫兹	75赫兹至– 21千赫兹	50赫兹至– 21千赫兹	45赫兹至– 21千赫兹	45赫兹至– 21千赫兹	50赫兹至– 21千赫兹
标称阻抗	2.3欧	2.3欧	2.3欧	2.3欧	2.3欧	2.3欧	2.3欧	2.3欧	2.3欧
灵敏度 (2.83V/m)	89分贝	90分贝	91分贝	92分贝	91分贝	92分贝	94分贝	94分贝	92分贝
外径	3-9/16" (89mm)	4-1/8" (104mm)	5-1/8" (130mm)	6-1/2" (165mm)	4-1/16" x 6-5/16" (102mm x 159mm)	5-11/16" x 8-11/16" (143mm x 220mm)	6-1/2" x 9-5/16" (164mm x 235mm)	6-1/2" x 9-5/16" (164mm x 235mm)	6-1/4" (158mm)
安装开口直径	3-1/8" (79mm)	3-3/4" (95mm)	4-3/4" (120mm)	5-1/8" (129mm)	3-7/16" x 5-3/4" (86mm x 145mm)	5" x 7-5/16" (126mm x 185mm)	5-15/16" x 8-3/4" (150mm x 221mm)	5-15/16" x 8-3/4" (150mm x 221mm)	5-1/8" (129mm)
总深度	2" (49mm)	2-19/32" (66mm)	2-7/8" (74mm)	2-7/8" (72mm)	2-1/4" (57mm)	2-7/8" (72mm)	3-7/16" (87mm)	3-3/8" (85mm)	2-5/8" (66mm)
安装深度	1-7/16" (36mm)	1-7/8" (47mm)	2-1/4" (57mm)	2-1/16" (52mm)	1-7/8" (47mm)	2-7/16" (61mm)	2-7/8" (74mm)	2-7/8" (74mm)	2-1/16" (52mm)

ХАРАКТЕРИСТИКИ

Русский

	GX302	GX402	GX502	GX602	GX642	GX862	GX962	GX963	GX600C
Тип	3-1/2" стерео спикер	4" стерео спикер	5-1/4" стерео спикер	6-1/2" стерео спикер	4" x 6" стерео спикер	5" x 7" / 6" x 8" стерео спикер	6" x 9" стерео спикер	6" x 9" трехканальный громкоговоритель	6-1/2" Высокочастотная головка
Мощность	25Вт	35Вт	45Вт	60Вт	40Вт	60Вт	100Вт	100Вт	70Вт
Пиковая мощность	75Вт	105Вт	135Вт	180Вт	120Вт	180Вт	300Вт	300Вт	210Вт
Диапазон частот	90Гц – 20кГц	75Гц – 21кГц	65Гц – 21кГц	50Гц – 21кГц	75Гц – 21кГц	50Гц – 21кГц	45Гц – 21кГц	45Гц – 20кГц	50Гц – 21кГц
Номинальный импеданс	2.3 Ом	2.3 Ом	2.3 Ом	2.3 Ом	2.3 Ом	2.3 Ом	2.3 Ом	2.3 Ом	2.3 Ом
Чувствительность (2,83 В на 1 м)	89дБ	90дБ	91дБ	92дБ	91дБ	92дБ	94дБ	94дБ	92дБ
Внешний диаметр	3-9/16" (89мм)	4-1/8" (104мм)	5-1/8" (130мм)	6-1/2" (165мм)	4-1/16" x 6-5/16" (102мм x 159мм)	5-11/16" x 8-11/16" (143мм x 220мм)	6-1/2" x 9-5/16" (164мм x 235мм)	6-1/2" x 9-5/16" (164мм x 235мм)	6-1/4" (158мм)
Монтажный диаметр	3-1/8" (79мм)	3-3/4" (95мм)	4-3/4" (120мм)	5-1/8" (129мм)	3-7/16" x 5-3/4" (86мм x 145мм)	5" x 7-5/16" (126мм x 185мм)	5-15/16" x 8-3/4" (150мм x 221мм)	5-15/16" x 8-3/4" (150мм x 221мм)	5-1/8" (129мм)
Глубина	2" (49мм)	2-19/32" (66мм)	2-7/8" (74мм)	2-7/8" (72мм)	2-1/4" (57мм)	2-7/8" (72мм)	3-7/16" (87мм)	3-3/8" (85мм)	2-5/8" (66мм)
Монтажная глубина	1-7/16" (36мм)	1-7/8" (47мм)	2-1/4" (57мм)	2-1/16" (52мм)	1-7/8" (47мм)	2-7/16" (61мм)	2-7/8" (74мм)	2-7/8" (74мм)	2-1/16" (52мм)

DANE TECHNICZNE

Polski

	GX302	GX402	GX502	GX602	GX642	GX862	GX962	GX963	GX600C
Typ	głośnik 2-drożny 3-1/2"	głośnik 2-drożny 4"	głośnik 2-drożny 5-1/4"	głośnik 2-drożny 6-1/2"	głośnik 2-drożny 4" x 6"	głośnik 2-drożny 5" x 7" / 6" x 8"	głośnik 2-drożny 6" x 9"	głośnik 3-drożny 6" x 9"	zestaw 2-drożny 6-1/2"
Moc ROS	25W	35W	45W	60W	40W	60W	100W	100W	70W
Moc szczytowa	75W	105W	135W	180W	120W	180W	300W	300W	210W
Pasmo przenoszenia	90Hz – 20kHz	75Hz – 21kHz	65Hz – 21kHz	50Hz – 21kHz	75Hz – 21kHz	50Hz – 21kHz	45Hz – 21kHz	45Hz – 21kHz	50Hz – 21kHz
Impedancja	2.3 omy	2.3 omy	2.3 omy	2.3 omy	2.3 omy	2.3 omy	2.3 omy	2.3 omy	2.3 omy
Skuteczność (2,83V@1m)	89dB	90dB	91dB	92dB	91dB	92dB	94dB	94dB	92dB
Średnica głośnika	3-9/16" (89mm)	4-1/8" (104mm)	5-1/8" (130mm)	6-1/2" (165mm)	4-1/16" x 6-5/16" (102mm x 159mm)	5-11/16" x 8-11/16" (143mm x 220mm)	6-1/2" x 9-5/16" (164mm x 235mm)	6-1/2" x 9-5/16" (164mm x 235mm)	6-1/4" (158mm)
Średnica otworu montażowego	3-1/8" (79mm)	3-3/4" (95mm)	4-3/4" (120mm)	5-1/8" (129mm)	3-7/16" x 5-3/4" (86mm x 145mm)	5" x 7-5/16" (126mm x 185mm)	5-15/16" x 8-3/4" (150mm x 221mm)	5-15/16" x 8-3/4" (150mm x 221mm)	5-1/8" (129mm)
Głębokość głośnika	2" (49mm)	2-19/32" (66mm)	2-7/8" (74mm)	2-7/8" (72mm)	2-1/4" (57mm)	2-7/8" (72mm)	3-7/16" (87mm)	3-3/8" (85mm)	2-5/8" (66mm)
Głębokość montażu	1-7/16" (36mm)	1-7/8" (47mm)	2-1/4" (57mm)	2-1/16" (52mm)	1-7/8" (47mm)	2-7/16" (61mm)	2-7/8" (74mm)	2-7/8" (74mm)	2-1/16" (52mm)

ESPECIFICAÇÕES

Português

	GX302	GX402	GX502	GX602	GX642	GX862	GX962	GX963	GX963
Tipo	3-1/2" altifalante de duas vias	4" altifalante de duas vias	5-1/4" altifalante de duas vias	6-1/2" altifalante de duas vias	4" x 6" altifalante de duas vias	5" x 7" / 6" x 8" altifalante de duas vias	6" x 9" altifalante de duas vias	6" x 9" altifalante de três vias	6-1/2" componente sistema de duas vias
Potência Contínua em funcionamento	25W	35W	45W	60W	40W	60W	100W	100W	70W
Pico de Potência em funcionamento	75W	105W	135W	180W	120W	180W	300W	300W	210W
Frequência de resposta	90Hz – 20kHz	75Hz – 21kHz	65Hz – 21kHz	50Hz – 21kHz	75Hz – 21kHz	50Hz – 21kHz	45Hz – 21kHz	45Hz – 21kHz	50Hz – 21kHz
Impedância nominal	2.3 ohms	2.3 ohms	2.3 ohms	2.3 ohms	2.3 ohms	2.3 ohms	2.3 ohms	2.3 ohms	2.3 ohms
Sensibilidade (2,83V @ 1m)	89dB	90dB	91dB	92dB	91dB	92dB	94dB	94dB	92dB
Diâmetro exterior	3-9/16" (89mm)	4-1/8" (104mm)	5-1/8" (130mm)	6-1/2" (165mm)	4-1/16" x 6-5/16" (102mm x 159mm)	5-11/16" x 8-11/16" (143mm x 220mm)	6-1/2" x 9-5/16" (164mm x 235mm)	6-1/2" x 9-5/16" (164mm x 235mm)	6-1/4" (158mm)
Diâmetro do corte de montagem	3-1/8" (79mm)	3-3/4" (95mm)	4-3/4" (120mm)	5-1/8" (129mm)	3-7/16" x 5-3/4" (86mm x 145mm)	5" x 7-5/16" (126mm x 185mm)	5-15/16" x 8-3/4" (150mm x 221mm)	5-15/16" x 8-3/4" (150mm x 221mm)	5-1/8" (129mm)
Profundidade total	2" (49mm)	2-19/32" (66mm)	2-7/8" (74mm)	2-7/8" (72mm)	2-1/4" (57mm)	2-7/8" (72mm)	3-7/16" (87mm)	3-3/8" (85mm)	2-5/8" (66mm)
Profundidade de montagem	1-7/16" (36mm)	1-7/8" (47mm)	2-1/4" (57mm)	2-1/16" (52mm)	1-7/8" (47mm)	2-7/16" (61mm)	2-7/8" (74mm)	2-7/8" (74mm)	2-1/16" (52mm)

規格

繁體中文

	GX302	GX402	GX502	GX602	GX642	GX862	GX962	GX963	GX600C
類型	3-1/2" 雙向喇叭	4" 雙向喇叭	5-1/4" 雙向喇叭	6-1/2" 雙向喇叭	4" X 6" 雙向喇叭	5" X 7" / 6" X 8" 雙向喇叭	6" x 9" 雙向喇叭	6" x 9" 三向喇叭	6-1/2" 雙向元件系統
連續供電處理	25W	35W	45W	60W	40W	60W	100W	100W	70W
尖峰供電處理	75W	105W	135W	180W	120W	180W	300W	300W	210W
頻率反應	90Hz – 20kHz	75Hz – 21kHz	65Hz – 21kHz	50Hz – 21kHz	75Hz – 21kHz	50Hz – 21kHz	45Hz – 21kHz	45Hz – 21kHz	50Hz – 21kHz
標稱阻抗	2.3 ohms	2.3 ohms	2.3 ohms	2.3 ohms	2.3 ohms	2.3 ohms	2.3 ohms	2.3 ohms	2.3 ohms
靈敏度 (2.83V/m)	89dB	90dB	91dB	92dB	91dB	92dB	94dB	94dB	92dB
外部直徑	3-9/16" (89mm)	4-1/8" (104mm)	5-1/8" (130mm)	6-1/2" (165mm)	4-1/16" x 6-5/16" (102mm x 159mm)	5-11/16" x 8-11/16" (143mm x 220mm)	6-1/2" x 9-5/16" (164mm x 235mm)	6-1/2" x 9-5/16" (164mm x 235mm)	6-1/4" (158mm)
托架輪廓直徑	3-1/8" (79mm)	3-3/4" (95mm)	4-3/4" (120mm)	5-1/8" (129mm)	3-7/16" x 5-3/4" (86mm x 145mm)	5" x 7-5/16" (126mm x 185mm)	5-15/16" x 8-3/4" (150mm x 221mm)	5-15/16" x 8-3/4" (150mm x 221mm)	5-1/8" (129mm)
總厚度	2" (49mm)	2-19/32" (66mm)	2-7/8" (74mm)	2-7/8" (72mm)	2-1/4" (57mm)	2-7/8" (72mm)	3-7/16" (87mm)	3-3/8" (85mm)	2-5/8" (66mm)
裝設後之厚度	1-7/16" (36mm)	1-7/8" (47mm)	2-1/4" (57mm)	2-1/16" (52mm)	1-7/8" (47mm)	2-7/16" (61mm)	2-7/8" (74mm)	2-7/8" (74mm)	2-1/16" (52mm)

TEKNIK ÖZELLIKLER

Türkçe

	GX302	GX402	GX502	GX602	GX642	GX862	GX962	GX963	GX600C
Tip	3-1/2" iki yönlü hoparlör	4" iki yönlü hoparlör	5-1/4" iki yönlü hoparlör	6-1/2" iki yönlü hoparlör	4" X 6" iki yönlü hoparlör	5" X 7" / 6" X 8" iki yönlü hoparlör	6" x 9" iki yönlü hoparlör	6" x 9" üç yönlü hoparlör	6-1/2" iki yönlü bileşen sistemi
Kesintisiz güç kullanımı	25W	35W	45W	60W	40W	60W	100W	100W	70W
Tepe gücü kullanımı	75W	105W	135W	180W	120W	180W	300W	300W	210W
Frekans Tepkisi	90Hz – 20kHz	75Hz – 21kHz	65Hz – 21kHz	50Hz – 21kHz	75Hz – 21kHz	50Hz – 21kHz	45Hz – 21kHz	45Hz – 21kHz	50Hz – 21kHz
Nominal Empedans	2.3 ohms	2.3 ohms	2.3 ohms	2.3 ohms	2.3 ohms	2.3 ohms	2.3 ohms	2.3 ohms	2.3 ohms
Duyarlılık (2.83V, 1m)	89dB	90dB	91dB	92dB	91dB	92dB	94dB	94dB	92dB
Harici çap	3-9/16" (89mm)	4-1/8" (104mm)	5-1/8" (130mm)	6-1/2" (165mm)	4-1/16" x 6-5/16" (102mm x 159mm)	5-11/16" x 8-11/16" (143mm x 220mm)	6-1/2" x 9-5/16" (164mm x 235mm)	6-1/2" x 9-5/16" (164mm x 235mm)	6-1/4" (158mm)
Montaj kesici çapı	3-1/8" (79mm)	3-3/4" (95mm)	4-3/4" (120mm)	5-1/8" (129mm)	3-7/16" x 5-3/4" (86mm x 145mm)	5" x 7-5/16" (126mm x 185mm)	5-15/16" x 8-3/4" (150mm x 221mm)	5-15/16" x 8-3/4" (150mm x 221mm)	5-1/8" (129mm)
Toplam derinlik	2" (49mm)	2-19/32" (66mm)	2-7/8" (74mm)	2-7/8" (72mm)	2-1/4" (57mm)	2-7/8" (72mm)	3-7/16" (87mm)	3-3/8" (85mm)	2-5/8" (66mm)
Montaj derinliği	1-7/16" (36mm)	1-7/8" (47mm)	2-1/4" (57mm)	2-1/16" (52mm)	1-7/8" (47mm)	2-7/16" (61mm)	2-7/8" (74mm)	2-7/8" (74mm)	2-1/16" (52mm)